## ■Pattern:

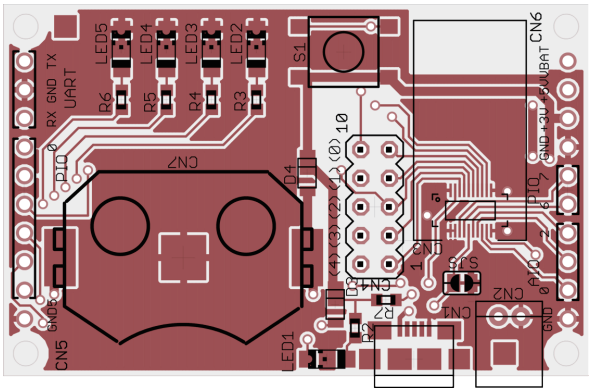

Front

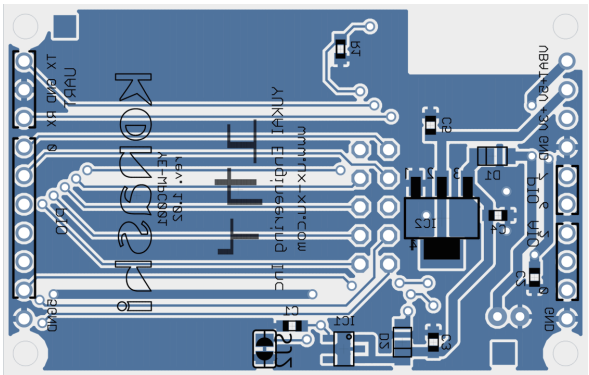

Back

## ■ Layout:

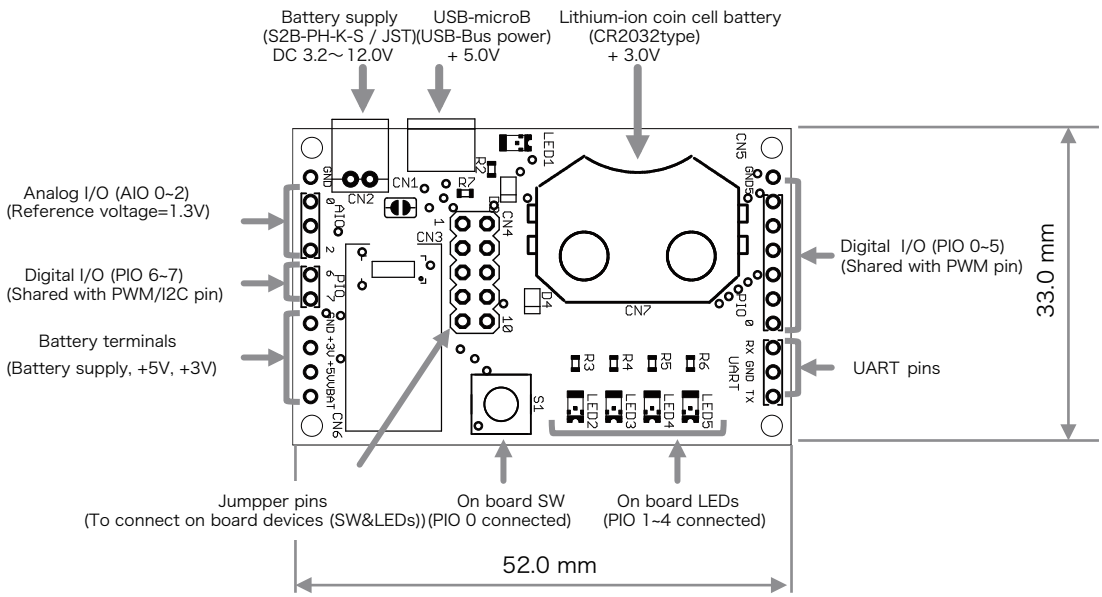

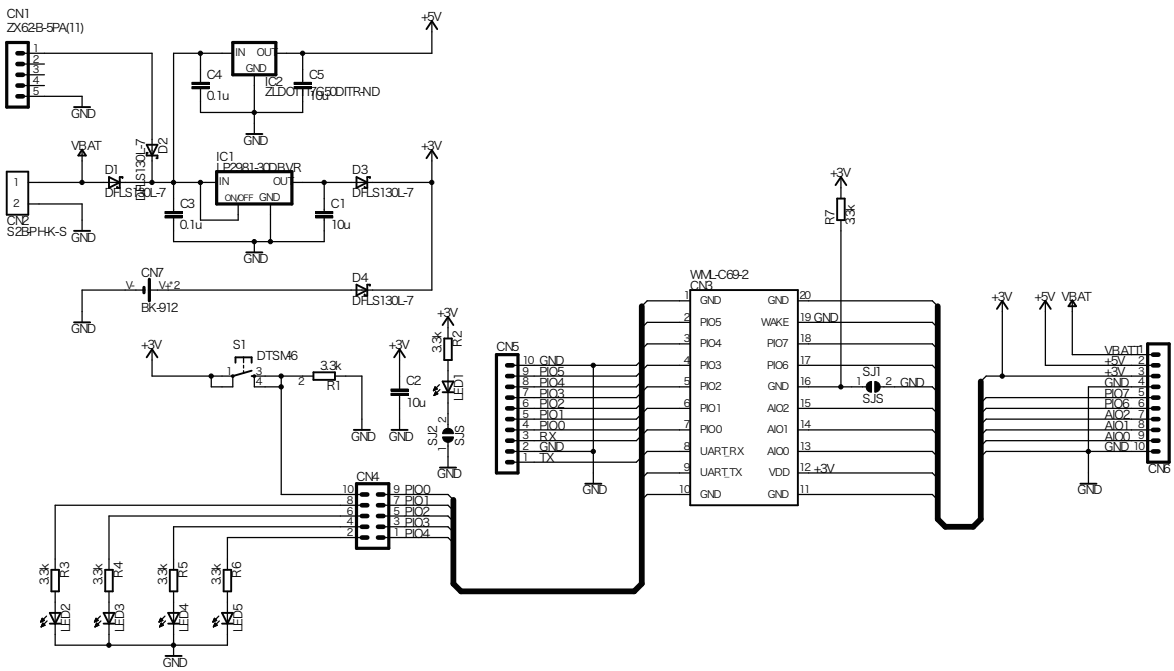
## ■Circuit Diagram: