CASE FINISH	CURRENT (AMPS)	WORKING VOLTAGE				MAXIMUM DC RESISTANCE (OHMS)	MAXIMUM VOLTAGE DROP		MINIMUM CAPACITANCE (uF)	MIN. INSERTION LOSS PER MIL-STD-220, FULL LOAD, +25°C												
		-55°C TO +85°C		-55°C TO +125°C																		
		AC	DC	AC	DC		DC	AC		14 KHz	20 KHz	50 KHz	75 KHz	100 KHz	150 KHz	300 KHz	500 KHz	1 MHz	10 MHz	100 MHz	1 GHz	10 GHz
SILVER	15	125(400Hz)	250	125(400Hz)	200	0.005	.075	---	0.25	--	--	--	9	10	14	19	--	30	50	65	70	--

PART MARKING:

54F-367-006
SCI DATECODE

PACKAGE MARKING:

BUBBLE PACK
50 PCS.

MARKING NOTES:

N/A

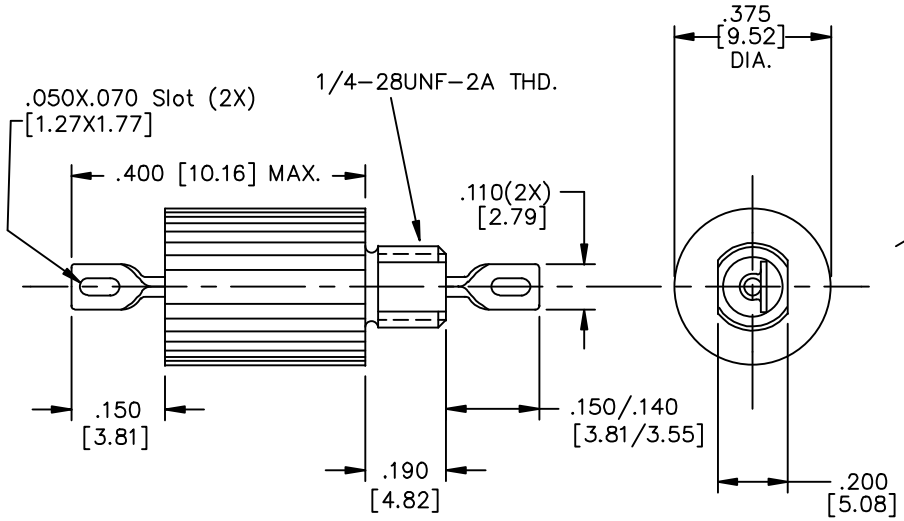

SCHEMATIC

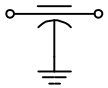

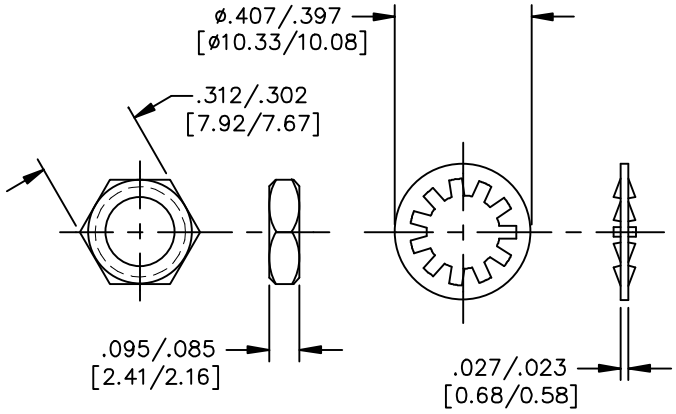

MTG. HARDWARE

RoHS compliant

NOTES:

1) MOUNTING TORQUE NOT TO EXCEED 7in-lbs.

00	REV. NO.	UNLESS OTHERWISE SPECIFIED DIMENSIONS ARE IN INCHES. [MILLIMETERS] DO NOT SCALE.	TOLERANCES UNLESS OTHERWISE SPECIFIED Fractions± Dec. .xx± Dec. .xxx± .010 Angles ±0° 30′	SPECTRUM CONTROL INC.	FAIRVIEW PENNSYLVANIA		
CN 47835-ENG	CHANGE NOTICE		CODE IDENT. NO. OLSP2	Dwn. KAUFFMAN Date 4-20-09	Description Low Pass EMI Filter		
				Sheet 1 of 1	54F-367-006		

Quality Products From The Specialists In Electro-Magnetic Compatibility