NOTES:

1. ELECTRICAL SPECIFICATIONS:
   CENTER FREQUENCY: 1592 MHz
   FREQUENCY TOLERANCE: +/−10 MHz
   3:1 VSWR B.W. = 175 MHz
   MIN GAIN @ C.F. = 4 dBic
   HALF POWER BEAMWIDTH:
   110° SOLID ANGLE
   EFFICIENCY: 60% TYPICAL
   VSWR @ C.F. = ≤ 1.8:1
   AXIAL RATIO: 6 dB
   RIGHT HAND CIRCULAR POLARIZATION
   Z_{IN} = 50 OHMS
2. SPECIFICATIONS ARE FOR UNPACKAGED ANTENNA.
3. FOOTPRINT AND ELECTRICAL SPECIFICATIONS ARE SUBJECT TO CHANGE. CONSULT SPECTRUM MICROWAVE FOR SPECIFIC APPLICATIONS.
4. TESTING TO BE PERFORMED ON AN ALUMINUM GROUND PLANE, 63mm (2.480 IN) X 63mm (2.480 IN) SQUARE, IN FREE SPACE.

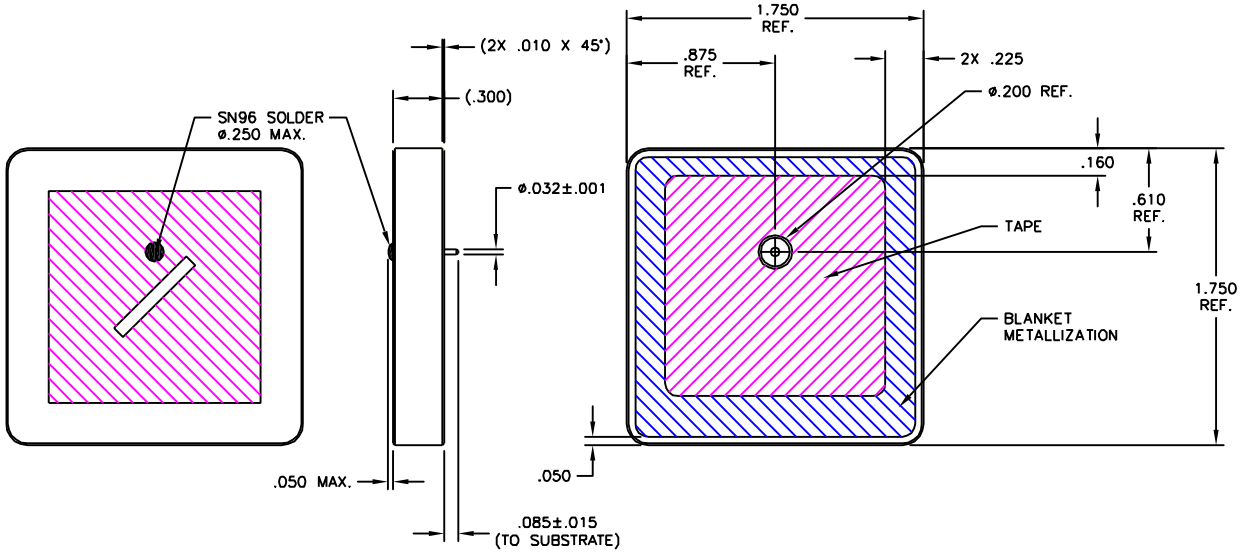

All technical information and the design disclosure in this drawing or in any accompanying technical data was originated by and is the property of Spectrum Microwave, Inc. All patent, proprietary, design, manufacturing, reproduction, use and sales rights in any information disclosed herein are reserved by Spectrum Control, Inc. No right or license to use any such information for any purpose other than as agreed to by Spectrum Control, Inc. is prohibited without written permission of Spectrum Control, Inc.

RoHS COMPLIANT

REV. NO.	00		
CHANGE NOTICE	CN 33012-CPD		

UNLESS OTHERWISE SPECIFIED DIMENSIONS ARE IN INCHES. DO NOT SCALE.

THIRD ANGLE

TOLERANCES UNLESS OTHERWISE SPECIFIED
Fractions ± 1/64
Dec. .xx± .02
Dec. .xxx± .005
Angles ±0° 30'

CODE IDENT. NO. OLSP2

SPECTRUM CONTROL INC.

FAIRVIEW PENNSYLVANIA

Dwn. KAUFFMAN
DATE 2-01-07
Engr. C.KIRETA
Sheet 1 of 1

Description
PATCH ANTENNA ASSEMBLY

PA451621-1575SA

Quality Products From The Specialists In Electro-Magnetic Compatibility